LINEARIZER TECHNOLOGY

CLFE-Series

The **CLFE-Series** is a frontend driver mini-system used for phase combined TWTAs, MPMs, or SSPAs. It provides RF gain, input and output level control, independent level and phase adjustment, and RF output power to drive an amplifier to saturation. It has 1 input and provides 2 outputs in one compact package.

The **CLFE-Series** is available at Ka band and other Satcom uplink bands.

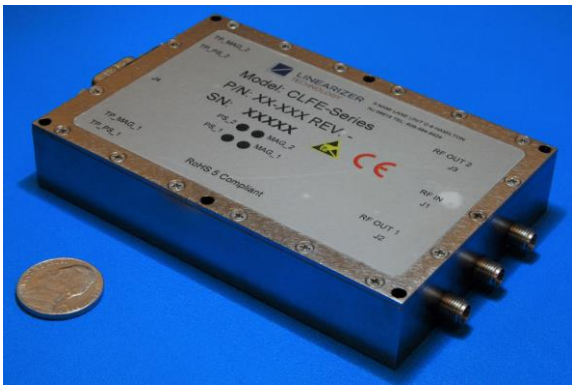

CLFE-Series
Phase Combined HPA Driver
4.50" L x 3.00" W x 0.80" H
(cm) 11.4 L x 7.62 W x 2.00 H

Uplink Frequency Bands

Frequency Range: 33.00 to 36.00 GHz (Ka)

General Performance

Input Power Level for HPA Rated Power:	-35 to -10 dBm
Output Power for HPA Saturation:	up to >+26 dBm
Gain:	> 36 dB (typ.)
Gain Flatness:	< ± 0.5 dB over any 500 MHz
Gain Slope:	< 0.02 dB/MHz
Gain Stability:	< ± 0.75 dB, -20 to +80°C
User Gain Attenuator Range:	32 dB (typ.)
Control:	0 to X Volts or 8/9 Bit Digital (.25/.15 dB step)
Independent Path GAIN adjustment:	5.0 dB
Independent Path Phase adjustment:	50 degrees
Spurious/Noise:	< -135 dBw/4 KHz (max Gain)
Input and Output VSWR:	2.0:1
RF Interface Connectors:	2.92 Female (1 input, 2 output)
DC Interface:	9 Pin Male D-Sub Controller
Interface:	Analog
DC Power:	+12 Volts, 1400 mA (typ.)

FEATURES/OPTIONS

Compact Package

Integrated Linearizer

Multiple Interface Options

Analog, I²C, RS232, RS485

Temperature Compensation

Extended Range -55 to +85°C

Analog or Digital User Attenuator

32 dB, 0-X Volts, 8/9 bit digital

TTL MUTE Function

O/P Power Detector

Contact us for additional custom features.

Any Frequency – Any Power

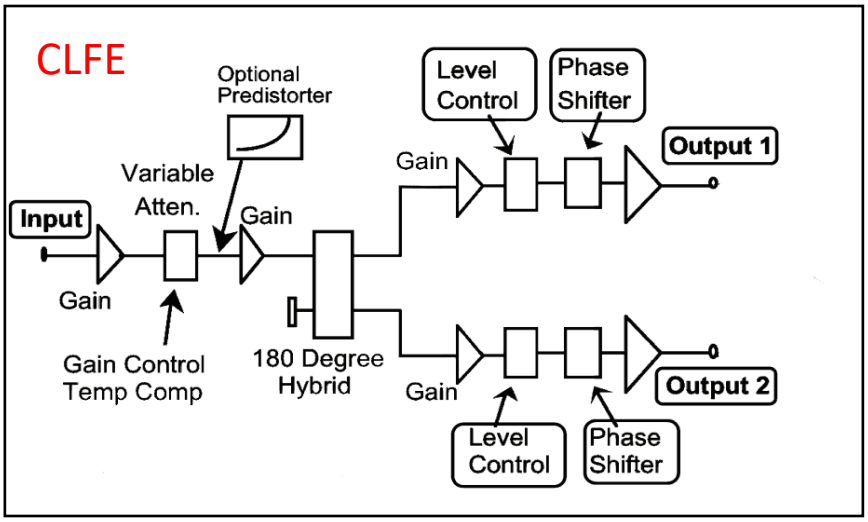

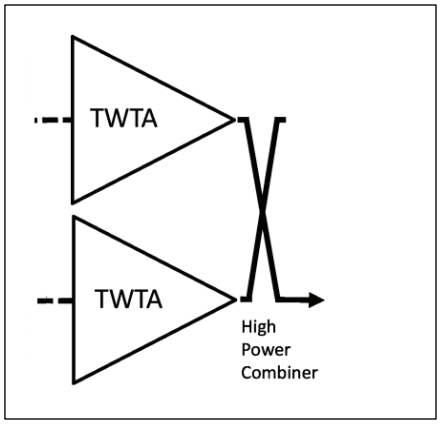

LINEARIZER COMMUNICATIONS GROUP

3 Nami Lane, Suite 9
Hamilton, NJ 08619
info@linearizer.com

O 609.584.8424
F 609.631.0177
linearizer.com